SEALING AND GUIDING SYSTEMS FOR HYDROPOWER EQUIPMENT

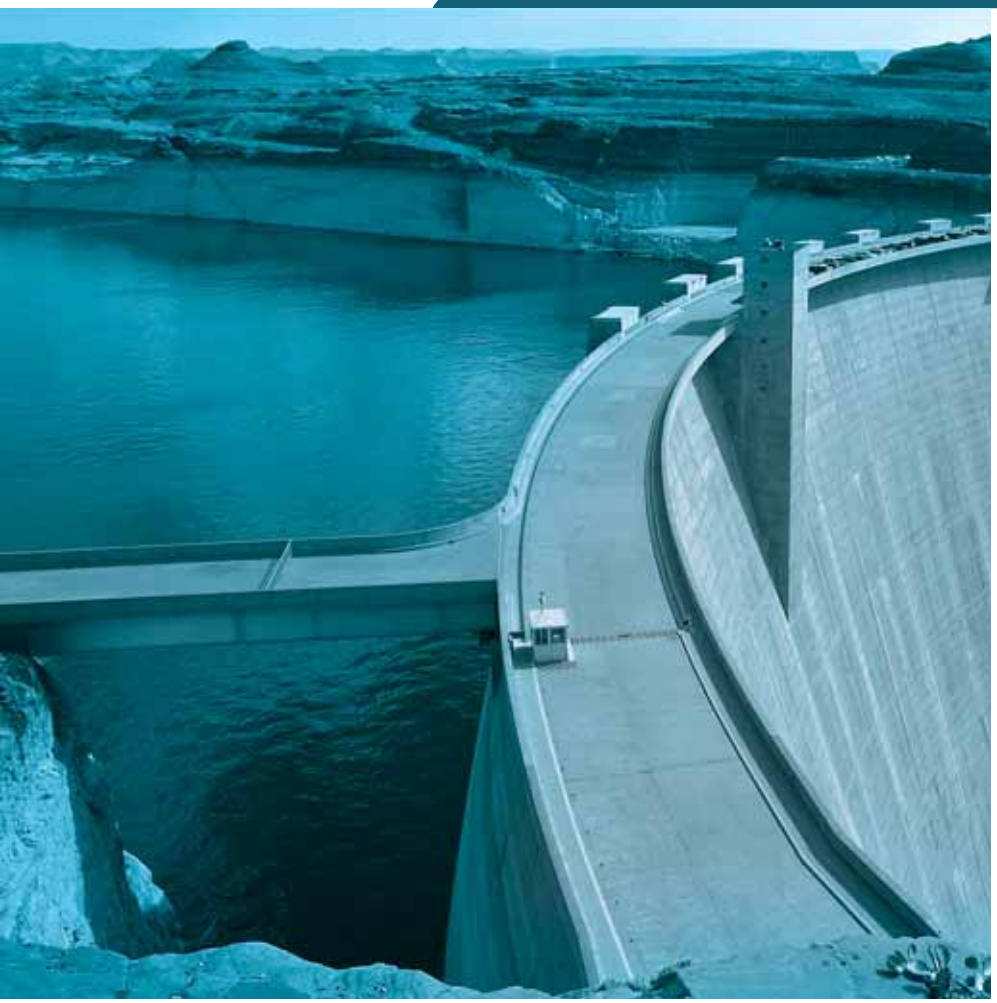

Repack-S

ALL YOU EXPECT
IN SEALING EXPERTISE

CONTENTS



A TEAM COMMITTED TO THE FUTURE

REPACK-S is specialised in the design, engineering and manufacturing of seals that meet the most demanding criteria and uses.

Its resolutely forward-looking human resources management has been keen to put the human element at the heart of the industrial process. The diverse, mixed, closely-knit team combines enthusiasm and experience, accuracy and expertise in all the stages involved in the production of sealing systems.

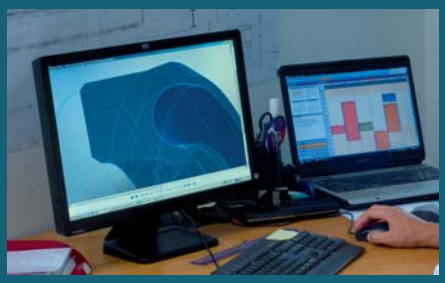

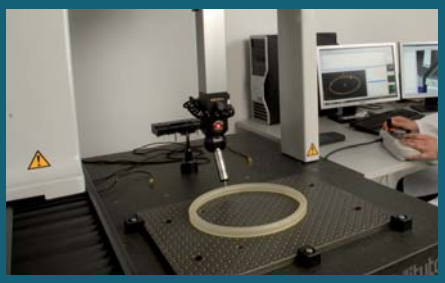

EXPERTISE & INNOVATION

With a Research and Development department, an Engineering Team, a dedicated Test Laboratory, a thorough Inspection and Quality Control department, REPACK-S has all the resources to provide:

A production system capable of delivering high levels of quality and reliability in compliance with the most stringent international standards.

An ability to listen and offer customised advice with respect to material choice and to determine the most cost-effective solutions.

A RELIABLE PROCESS

Equipped with state-of-the-art production machinery, our factory can handle orders for individual pieces to mid-size batches of sealing components ranging from 1.8 to 2500 mm in diameter. This gives REPACK-S unique flexibility as a key partner.

Particular attention is paid to the choice of raw material to ensure that our seals are reliable and effective.

Detailed production records are kept for a minimum of 5 years.

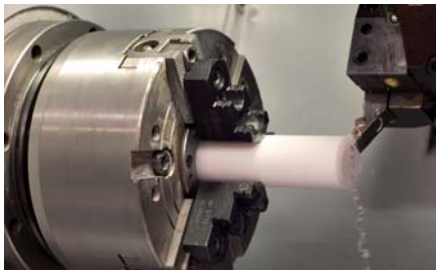

RESEARCH & DEVELOPMENT QUALITY CONTROL

To maximise the lifetime in service of its sealing systems, REPACK-S relentlessly test them on various dedicated test rigs capable of reproducing the harshest constraints generated in Hydropower machinery and anscillaries.

These testing machnies allow the Repack-S research team to control, improve and validate the best solutions to industry-wide seal-related problems.

With many years of experience in the Hydropower industry, REPACK-S is uniquely positioned to help you understand and solve premature wear and performance degradation of seals in your power generation equipment.

TYPICAL SEAL FAILURE CAUSES:

Abrasion

Results from the presence of sand particles, mud,,... in the water that comes into contact with the seals and lodge between the seals and the associated mechanical parts.

Wear

Friction on poor quality or worn surfaces, oxidation, scale deposits can scratch and prematurely wear the seals.

Cavitation

Air bubbles that form and expand in an explosively manner can cause erosion of the metal parts as well as the seals.

Vibration

In order to cope with the effects of vibrations the seals need to be as elastic as possible and have low compression set.

Eccentricity

High stresses applied on large diameter parts and machining tolerance stack-up frequently result in high eccentricity. To cope with this the seal design, the initial interference and the material choice must be adapted to obtain a profile capable of deforming sufficiently without being permanently distorted.

Extrusion

The tolerance stack-up combined with the eccentricity between mechanical parts can result in clearance gaps such that the system pressure is able to force the seals to partially extrude in them.

Stick-Slip

On servo-motors which are only operated occasionally, seals can stick to the mating surfaces and/or cause a jerking motion. In both instances materials with low coefficients of friction must be used.

OSIS®
Advanced Seal Joining Solutions

Patented by Repack-S

THE REVOLUTIONARY NEW ON-SITE JOINING SYSTEM FOR LARGE DIAMETER SEALS

REPACK-S has created **OSIS®**, an **innovative polyurethane (PU) injection system** that enables service engineers to easily and precisely join high-performance split seals designed and manufactured specifically for Hydropower equipment.

Current available technologies and techniques for joining conventional open-moulded elastomer seals (often in NBR or HNBR) have well-known limitations.

With the **patented OSIS® joining system**, it is now possible to obtain **totally homogeneous seal joints** – without compromise in terms of mechanical strength, structural integrity or geometrical continuity – **even in the most difficult on-site maintenance conditions.**

With **OSIS®**, REPACK-S offers you an **EASY, EFFECTIVE** and **RAPID** mean to replace your old seals with the most advanced ones in the industry, **without having to dismantle all your machinery and associated ancillaries.**

PRODUCT RANGE

SEALS AND SCRAPERS

- **Static sealing applications:** O-rings, D-rings, Back-up rings, rubber moulded parts
- **Dynamic sealing applications:** U seals, V packing, composite seals (DanaWing® - DanaFlex® - DanaGlide® - DanaStep® - DanaCap®)
- **Rotary applications:** U-seals, V packing, composite seals
- **Spring energised seals :** DanaFlex®
- **Scrapers:** large range of profiles including the twin-lip metallic scraper HRWS for the harshest service conditions.

DANAWING®

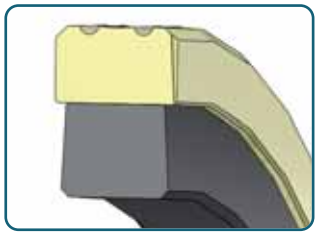

DANAROTO®

DANAFLEX®

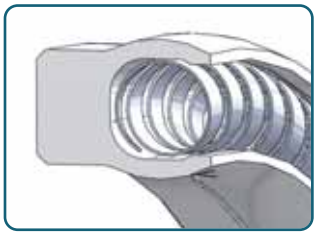

DANAGLIDE®

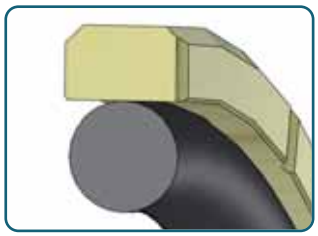

DANACAP®

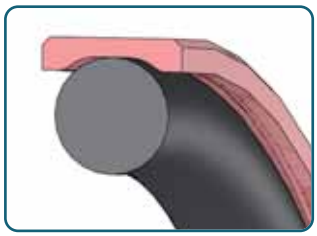

DANASTEP®

BUSH-BEARINGS & WEAR RINGS IN REPKOT®

Machined parts, guiding strip and wear rings:

Advantages
- Self-lubricated => no need for polluting lubricants
- High compression load resistance
- High wear and abrasion resistance => long service life
- Low humidity absorption => dimensional stability

Other characterics:
- Electrically insulating, vibration insulating
- Low density
- Non-toxic
- Can be machined

Specificities:
- **R2M:** filled in MoS2 & PTFE - *for use in water*
- **R4:** filled with Graphite - *for use in oil*
- **RI5MP:** filled with MoS2 & PFTE + PTFE fabric - *for dry use*

- Maximum resistance to compressive load: 414 N/mm2

Wear rings
R2M or R4

Alternative to hard guiding materials traditionally used *(eg. bronze, metal coated parts or bimetallic components)*

Bush-bearings
R2M or R15MP

Direct substitute for phosphor bronze bearing sleeves and bushes

GROOVE DIMENSIONS

Standard dimensions:
The dimensions of standard grooves and housings are defined in our various catalogues. They meet the current requirements of international standards: ISO, UE, DIN, NF, etc.

Specific dimensions:
We are able to adapt our different seal profiles to existing grooves and housings. Bespoke seal profiles may also be required to improve to improve the performance of existing solutions or to make seal installation easier during maintenance operations.

Face Type Seal Assembly

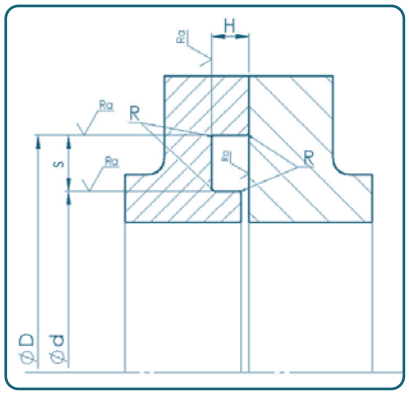

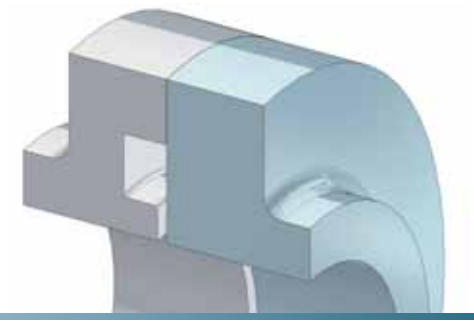

Piston Type Seal Assembly

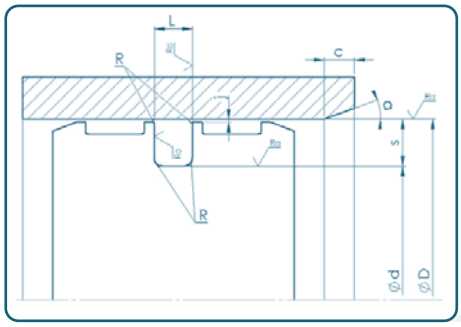

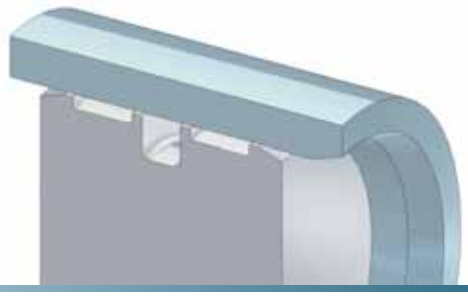

Rod Type Seal Assembly

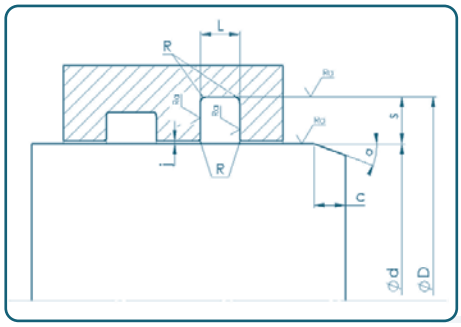

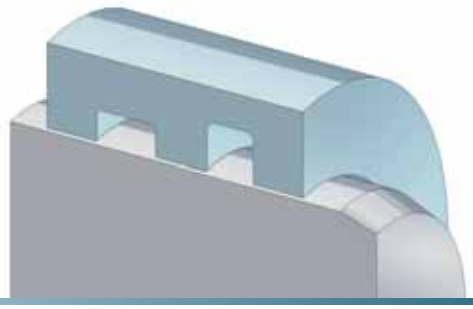

BALANCING PISTON

POSSIBLE SET-UP

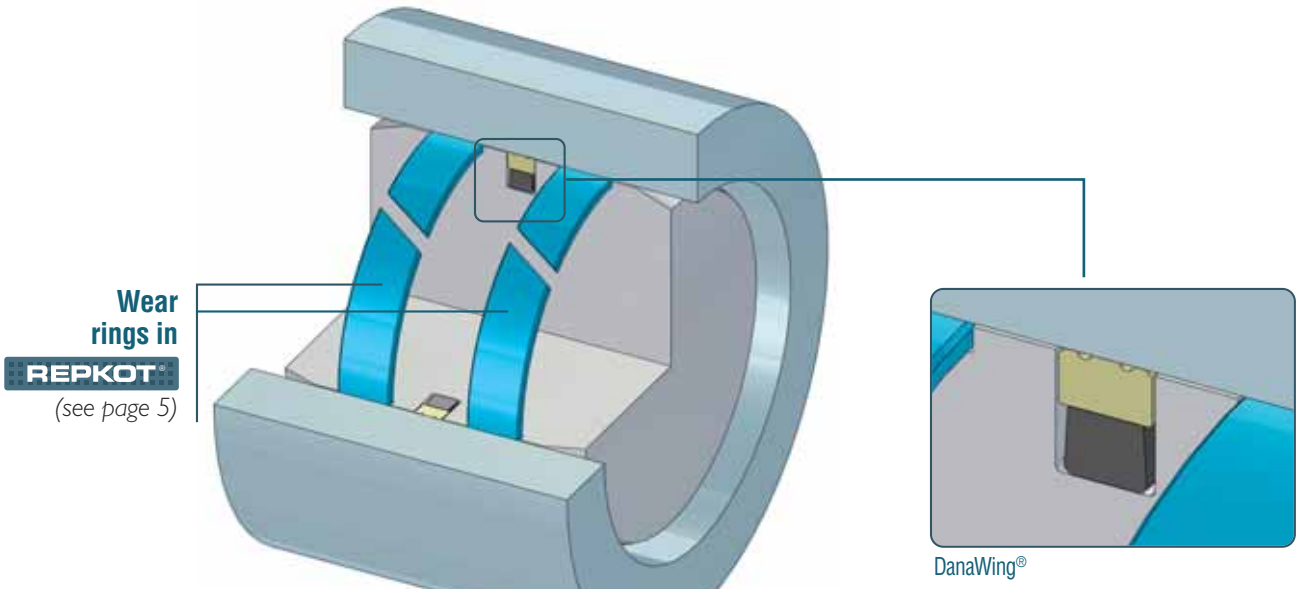

DANAWING® *Patented by Repack-S*

Double-acting composite seal – according to ISO 7425/1 – comprising a friction pad with multiple sealing edges and a trapezoidal shape rubber energiser.

Advantages:

- No oil film between chambers => no pressure loss and excellent position holding
- Precise positioning
- Excellent sealing even at low pressure
- No random effect
- Very low friction

Tried & tested materials:

- **Dynamic sealing pad:** P24 (filled PTFE), P81 (PU), P82 (PU) or P91 (UHMW-PE) depending on surface hardness
- **Energiser:** Low compression set NBR or FKM 70 shores A compound

Note: DanaWing® seals can also be supplied for non-standard grooves and can be manufactured from other materials than those listed above, depending on the operating conditions.

THE HIGH PERFORMANCE SOLUTION!

ALTERNATIVE SEALING SOLUTIONS

DANAGLIDE®

Double-acting composite seal – according to ISO 7425/1 – comprising a rectangular thermoplastic friction pad and an elastomer o-ring energiser.

Advantages:

- Narrow foot print
- Reduced stiction effect from standstill
- Low friction => low energy consumption
- Excellent extrusion and abrasion resistance => well proven reliability

Tried & tested materials:

- **Dynamic sealing pad :** P81 (PU), P82 (PU) or P91 (UHMW-PE)
- **Energiser:** Low compression set NBR or FKM 70 shores A compound

Note: DanaGlide® seals can also be supplied for non-standard grooves and can be manufactured from other materials than those listed above, depending on the operating conditions.

GUE - type seal

Single-acting seal comprising an elastomer part responsible for sealing and a rubber-impregnated fabric-reinforced back..

Advantages:

- Effective at both low and high pressures
- Self-energised by the system pressure => no need for adjustment
- Good extrusion and abrasion resistance
- Compact cross-sectional profile => low volume
- Can be installed in closed grooves *(contact us)*
- Can be adapted to hardware presenting severe misalignments

Tried & tested materials:

- **Sealing part :** NBR or HNBR specific compounds
- **Back:** rubber impregnated cotton or Kevlar® fabric.

Note: GUE - type seals can also be supplied for non-standard grooves and manufactured from other materials than those listed above, depending on the operating conditions.

HUX - type seal

Single-acting seal comprising an outer jacket in polyurethane acting as a dynamic seal and housing an elastomer o-ring energiser which enables the jacket to seal even at low pressure.

Advantages:

- Good abrasion resistance
- Asymmetrical and compact profile that can be customised to suit any groove dimensions
- Able to cope with ballooning effects (as found in hydraulic cylinders undergoing severe deformation)
- Easy to install and retrofit

Tried & tested materials:

- **Jacket:** P82 (PU) or P84 (PU)
- **O-ring energiser:** Low compression set NBR or FKM 70 shores A compound

Note: HUX - type seals are custom designed & made, depending on the operating conditions.

DANAFLEX® H-type

Single-acting seal comprising an external thermoplastic jacket acting as a dynamic seal and housing a helical spring which enables the jacket to seal even at low pressure.

Advantages:

- Extreme extrusion resistance
- The lowest friction forces
- No drift in performance over time

Tried & tested materials:

- **Jacket:** P41 (filled PTFE), P91 (UHMW- PE)
- **Spring:** AISI 304

Note: DanaFlex® seals are custom designed & made, depending on the operating conditions.

NEEDLE STEM

POSSIBLE SET-UP

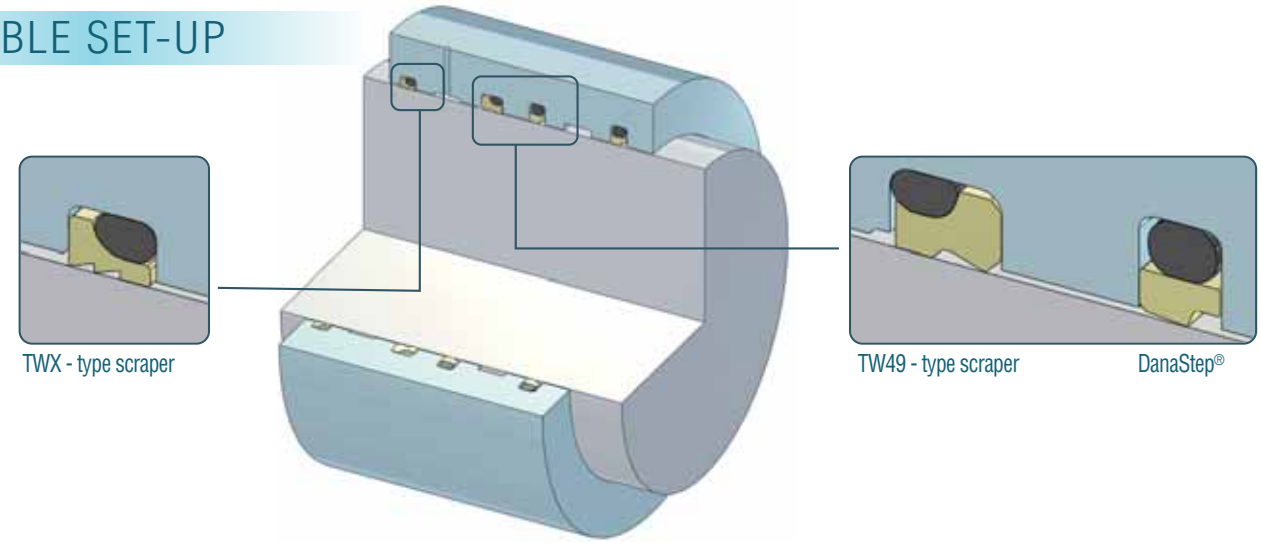

TWX - type scraper

Assembly comprising a thermoplastic part with multiple lips that provide the scraping function and an elastomer o-ring energiser that ensures the scraping lips remain in contact with the rod.

Advantages:
- High efficiency : the double scraping lip acts as a trap for abrasive particles
- Hill acts as a secondary lip
- Low friction => **low energy consumption**
- Proven long term reliability

Tried & tested materials:
- **Main part:** P81 (PU), P89 (UHMW-PE)
- **O-ring energiser :** Low compression set NBR or FKM 70 shores A compound

Note: TWX - type scrapers are custom-designed and can be made from other materials than those listed above, depending on the operating conditions.

TW49 - type scraper

Double-acting scraper comprising a dynamic part made out of high-performance thermoplastics and an elastomer o-ring energiser installed on the outer diameter.

Advantages:
- Highly effective
- Excellent stability
- Low friction (no stick-slip effect) => **low energy consumption**
- Excellent extrusion resistance => **well proven reliability**

Tried & tested materials:
- **Main part:** P81 (PU), P91 (UHMW-PE)
- **O-ring energiser:** Low compression set NBR or FKM 70 shores A compound

Note: TW49 - type scrapers can also be designed for non-standard grooves and manufactured from other materials than those listed above, depending on the operating conditions.

DANASTEP®

Single-acting composite seal – according to ISO 7425/1 – comprising a profiled dynamic thermoplastic element and an elastomer o-ring energiser installed on the outer diameter.

Advantages:

- Low friction (no stick-slip effect) => **low energy consumption**
- Excellent extrusion resistance => **well proven reliability**

Tried & tested materials:

- **Main part:** P24 (filled PTFE), P32 (filled PTFE) P81 (PU), P91 (UHMW-PE)
- **O-ring energiser :** Low compression set NBR or FKM 70 shores A compound

Note: DanaStep® seals can also be designed for non-standard grooves and manufactured from other materials than those listed above, depending on the operating conditions.

ALTERNATIVE SEALING SOLUTIONS

CH - type Chevron packing

Assembly comprising several fabric-reinforced "V"-shape rings in NBR (or HNBR) - that seal - and outer rings made out of high-modulus materials (eg. PA, PE, POM or highly reinforced elastomer compounds) that are used to preload the complete unit and prevent the "V"-shape elements from extruding.

Advantages:

- Limits considerably the residual oil thin film on the sliding surfaces
- High tolerance to scratches thanks to a large contact surface
- Good extrusion and abrasion resistance
- Well proven reliability
- Sealing effectiveness is retained even in case of significant buckling of the cylinder rods => **ideal for long-stroke hydraulic actuators**
- Possibility to adjust pre-load during maintenance operations

Tried & tested materials:

- **"V"-shape elements:** Fabric-reinforced NBR or HNBR compounds, P84 (PU)
- **Outer elements:** Kevlar®-fabric reinforced NBR or HNBR, PA, P91 (UHMW-PE), POM

Note: CH – type Chevron packing are custom-designed and can be manufactured from other materials than those listed above, depending on the operating conditions.

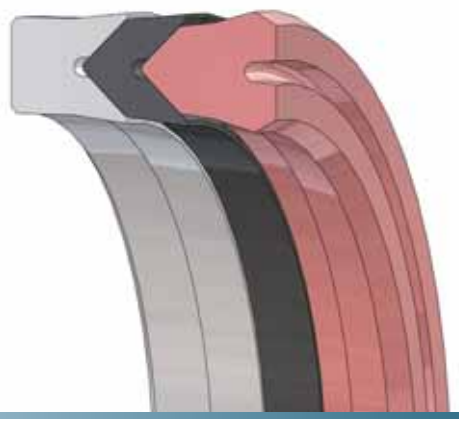

NOZZLE GUIDE VANE

POSSIBLE SET-UP

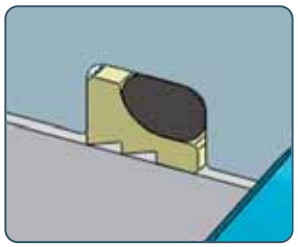

TWX - type scraper

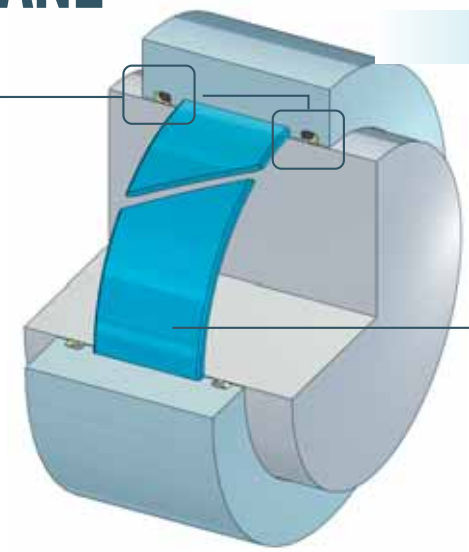

Bush-bearing in

REPKOT

(see page 5)

TWX - type scraper

Assembly comprising a thermoplastic part with multiple lips that provide the scraping function and an elastomer o-ring energiser that ensures the scraping lips remain in contact with the rod.

Advantages:

- High efficiency : the double scraping lip acts as a trap for abrasive particles
- Hill acts as a secondary lip
- Low friction => low energy consumption
- Proven long term reliability

Tried & tested materials:

- **Main part:** P81 (PU), P89 (UHMW-PE)
- **O-ring energiser :** Low compression set NBR or FKM 70 shores A compound

Note: TWX - type scrapers are custom-designed and can be made from other materials than those listed above, depending on the operating conditions.

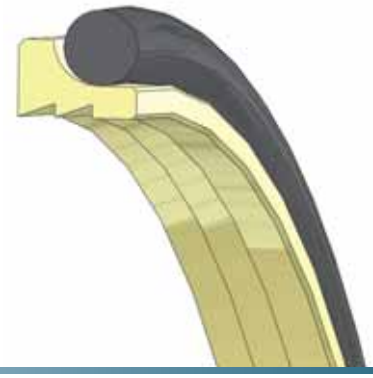

ALTERNATIVE SEALING SOLUTIONS

TW 50 - type scraper-seal

Double-acting composite scraper-seal providing additional protection against external pollution. Assembly comprising a high performance thermoplastic pad and 2 elastomeric o-ring energisers installed on the outer diameter.

Advantages:

- Excellent sealing ability even at low pressure
- Low friction (no stick-slip effect) => low energy consumption
- Provides a high level of protection for the hydraulic system.

Note: High-frequency specific designs are also available.

Tried & tested materials:

- **Main element:** P81 (PU), P91 (UHMW-PE)
- **O-ring energiser:** Low compression set NBR or FKM 70 shores A compound

Note: TW50 - type scraper seals are custom-designed and can be made from other materials than those listed above, depending on the operating conditions.

TW49 - type scraper

Assembly comprising a double-acting scraping element made out of high-performance thermoplastics and an elastomer o-ring energiser installed on the outer diameter.

Advantages:

- High scraping effectiveness
- Excellent stability
- Low friction (no stick-slip effect) => **low energy consumption**
- Excellent extrusion resistance => **well proven reliability**

Tried & tested materials:

- **Main elements:** P81 (PU), P91 (UHMW-PE)
- **O-ring energiser:** Low compression set NBR or FKM 70 shores A compound

Note: TW49 - type scrapers are custom-designed and can be made from other materials than those listed above, depending on the operating conditions.

HRDIC - type scraper

Double-acting elastomer or polyurethane scraper according to ISO 6195/C.

Advantages:

- Small footprint
- Good scraping effictiveness
- Easy to install

Tried & tested materials:

- P82 (PU), P84 (PU), NBR or FKM 90 Shores A

Note: HRDIC - type scrapers can also be designed for non-standard grooves and manufactured from other materials than those listed above, depending on the operating conditions.

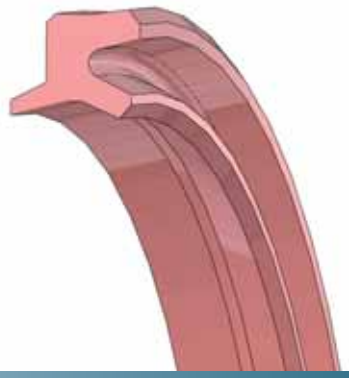

HRDM - type scraper

Double-acting composite scraper comprising a dynamic elastomer or polyurethane element and a metallic cage - bonded on the outer diameter – which can be press-fitted into an open groove.

Advantages:

- Narrow footprint
- Good scraping effectiveness
- Fits into open grooves

Tried & tested materials:

- **Main element** P82 (PU), P84 (PU), NBR or FKM 90 Shores A
- **Metallic cage :** carbon steel, Stainless steel 304

Note: HRDM - type scrapers are custom-designed and can be manufactured from other materials than those listed above, depending on the operating conditions.

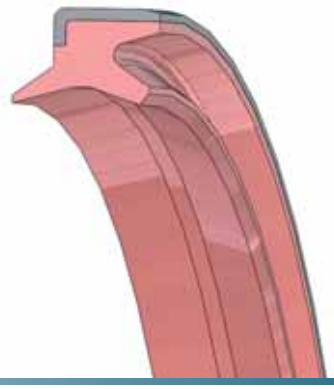

GUIDE VANE (WICKET GATE)

POSSIBLE SET-UP

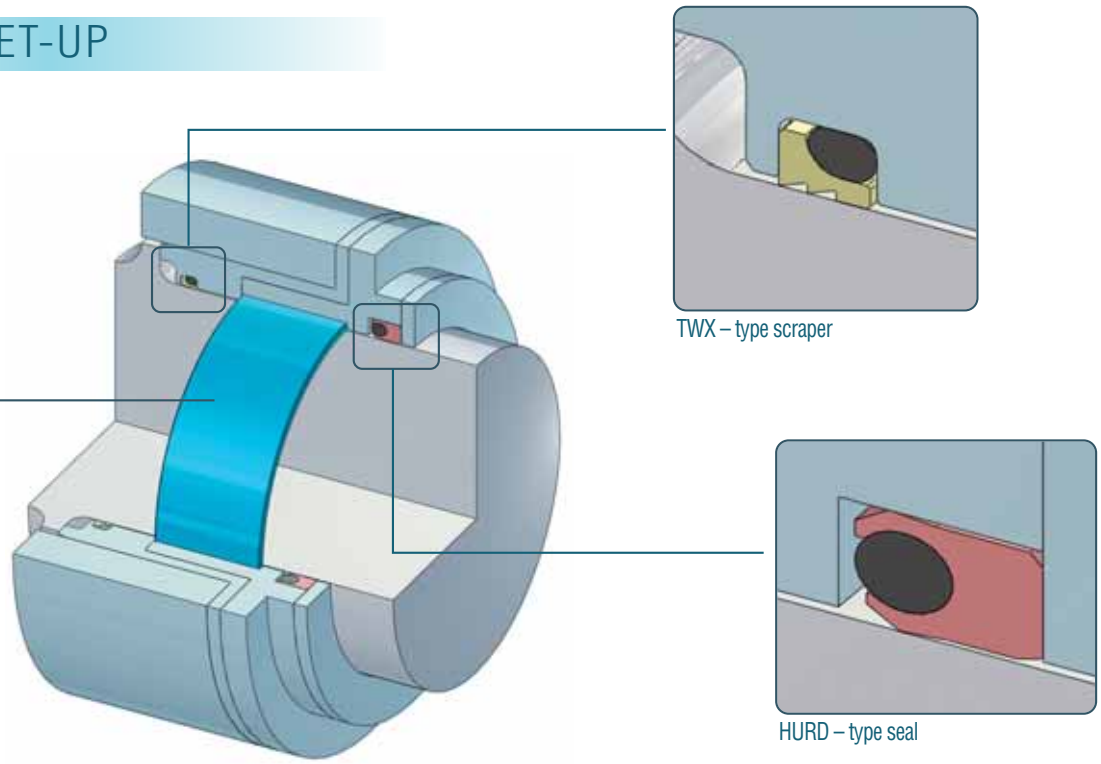

ALTERNATIVES TO THE TWX - TYPE SCRAPER

DANAROTO®

Double-acting composite seal comprising a pad with multiple sealing grooves and an elastomer o-ring energiser installed on the outer diameter.

Advantages:

- Designed specifically for oscillating and rotary movements
- Prevents ingress of abrasive particles in the bush-bearing assemblies => extended lifetime in service
- Very low friction => low energy consumption
- Excellent extrusion resistance => well proven reliability

Tried & tested materials:

- Main part: P81 (PU), P91 (UHMW-PE)
- O-ring energiser: Low compression set NBR or FKM 70 shores A compound

Note: DanaRoto® seals are custom-designed and can be manufactured from other materials than those listed above, depending on the operating conditions.

CTX - type scraper

Scraper made out of high-performance polyurethane featuring a helical groove that acts like a barrier against abrasive particles when installed against the runner blade thrust collar.s. It complements the main blade root seal.

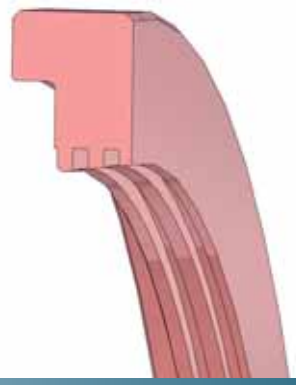

Advantages:

- Lets water pass through to allow lubrication of the bearings and bushes but prevents ingress of abrasives particles
- Shields the sealing systems => **extended lifetime in service**
- Excellent abrasion resistance => **well proven reliability**

Tried & tested materials:

- P81 (PU), P84 (PU)

Note: CTX - type scrapers are custom-designed and can be manufactured from other materials than those listed above, depending on the operating conditions.

ALTERNATIVE SOLUTIONS TO HURD -TYPE SEAL

CHL - type Chevron Packing

Single-acting assembly comprising one or several elastomer "V" rings associated to a semi-rigid frontal sealing ring and a polyurethane - or elastomer - support ring.

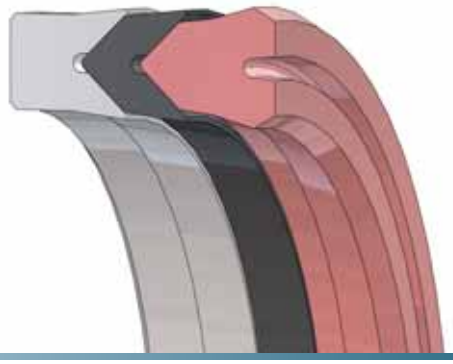

Advantages:

- High sealing effectiveness thanks to the large contact surface
- Excellent abrasion and extrusion resistance => **well proven reliability**
- Self-energised by the system pressure => **no pre-load adjustment required**

Tried & tested materials:

- **"V"-shape rings:** Fabric reinforced NBR or HNBR, P84 (PU)
- **Frontal sealing ring:** Kevlar® fabric reinforced NBR or HNBR, P84(PU), P91 (UHMW-PE)
- **Support ring:** NBR or HNBR, P84 (PU)

Note: CHL-type Chevron packing are custom-designed and can be manufactured from other materials than those listed above, depending on the operating conditions.

GUE - type seal

Single-acting seal comprising an elastomer part responsible for sealing and a rubber-impregnated fabric-reinforced back.

Advantages:

- Effective at both low and high pressures
- Self-energised by the system pressure => **no adjustment required**
- Good extrusion and abrasion resistance
- Compact cross-sectional profile => **small footprint**
- Can be installed in closed grooves *(contact us)*
- Can be adapted to hardware presenting severe misalignments

Tried & tested materials:

- **Sealing part :** NBR or HNBR specific compounds
- **Back:** rubber-impregnated cotton or Kevlar® fabric

Note: GUE - type seals can also be used for non-standard grooves and can be manufactured from other materials than those listed above, depending on the operating conditions.

BLADE ROOT PIVOT SEALING & GUIDING

POSSIBLE SET-UP

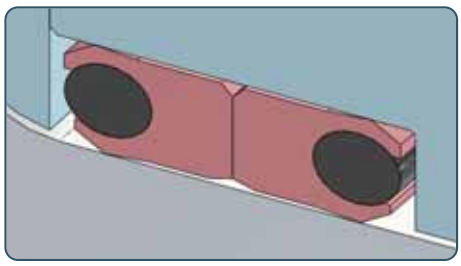

Two HURP - type seals fitted back-to-back

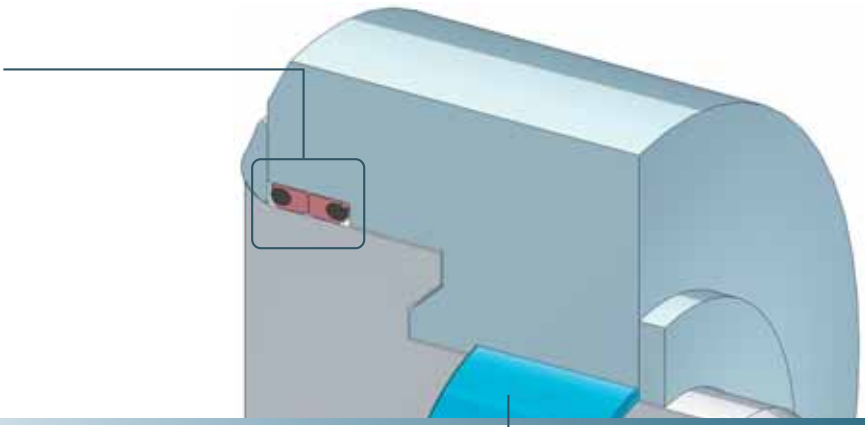

Asymmetrical single-acting seal specifically developed for blade applications and comprising an outer polyurethane sealing jacket and elastomer o-ring energiser.

Advantages:
- Extended lifetime
- Excellent wear and abrasion resistance
- Ability to cope with high eccentricity
- Ideal for retrofits and upgrades

Tried & tested materials:
NBR 85 Shore A, NP03 (OSIS®), P84 (PU)

AVAILABLE WITH OSIS® Advanced Seal Joining Solutions

Bush-bearing in REPKOT®
(see page 5)

ALTERNATIVE SOLUTIONS TO THE BACK-TO-BACK HURP-TYPE SEALS

Two GUE - type seals fitted back-to-back

Assembly comprising two GUE – type seals fitted back-to-back. One side, prevents the oil contained in the turbine hub from polluting the passing water whilst the other prevents the passing water from mixing with the oil that lubricates the blades actuating mechanism.

Advantages:
- Effective sealing at low and high pressures
- Self-energised by the system pressure => no adjustment required
- Can be adapted to hardware presenting severe misalignments and to specific operating conditions
- Good abrasion resistance

Tried & tested materials:
- **Sealing part :** NBR or HNBR specific compounds
- **Back:** rubber-impregnated cotton or Kevlar® fabric

Note: GUE - type seals can also be used for non-standard grooves and can be manufactured from other materials than those listed above, depending on the operating conditions.

Two CHL - type Chevron packing fitted back-to-back

Assembly comprising two CHL – type Chevron packing fitted back-to-back. One side, prevents the oil contained in the turbine hub from polluting the passing water whilst the other prevents the passing water from mixing with the oil that lubricates the blades actuating mechanism.

Advantages:

- High sealing effectiveness
- High tolerance to scratches thanks to a large contact surface
- Limits considerably the residual oil thin films on the sliding surfaces.
- Great dimensional adaptability
- Easy installation => **fits into open grooves**
- Self-energised by the system pressure => **no adjustment required**
- Good abrasion resistance => **well proven reliability**

Tried & tested materials:

- **"V"-shape rings:** Fabric reinforced NBR or HNBR, P84 (PU)
- **Frontal sealing ring:** Kevlar® fabric reinforced NBR or HNBR, P84(PU), P91 (UHMW-PE)
- **Support ring:** NBR or HNBR, P84 (PU)

Note: CHL-type Chevron packing are custom-designed and can be manufactured from other materials than those listed above, depending on the operating conditions..

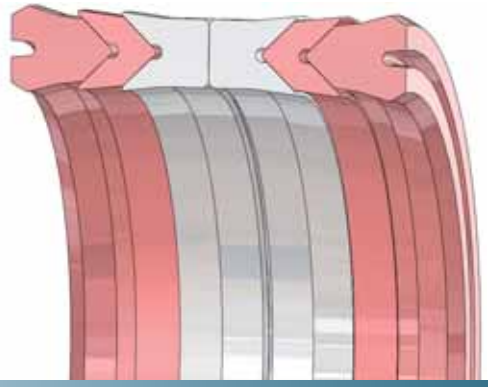

DANACAP® - Special

Double-acting seal comprising a self-lubricated dynamic pad with presenting a sealing groove and a rectangular elastomer energiser installed on the inner diameter.

Advantages:

- Compact design
- Ability to cope with high radial eccentricity
- Excellent abrasion resistance => **extend lifetime in service**

Tried & tested materials:

- **Dynamic sealing pad:** P81 (PU), P91 (PE-UHMW)
- **Rectangular energiser:** Low compression set NBR or FKM 70 shores A compound

Note: DanaCap® Special seals can be custom designed and manufactured from other materials than those listed above, depending on the operating conditions..

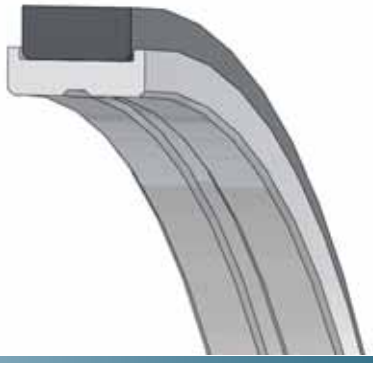

X - type seal

Double-acting seal."X" - shape profile enables bi-directional sealing: on the oil side and on the water side.

Advantages:

- Compact design
- Good abrasion resistance
- Easy to install

Tried & tested materials:

Low compression set NBR or HNBR 70 Shore A,. NP03 (OSIS®), P84 (U)

Note: X - type seals are custom designed and manufactured, depending on the operating conditions.

AVAILABLE WITH OSIS® Advanced Seal Joining Solutions

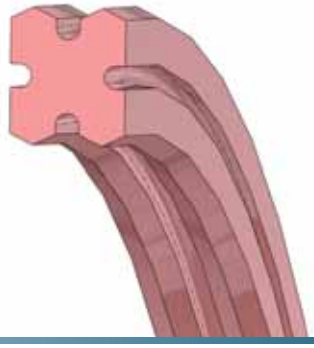

ROD SEALING & GUIDING

POSSIBLE SET-UP

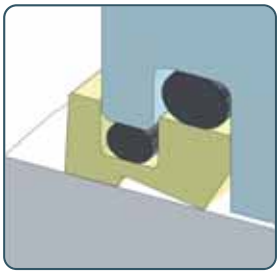

TW50 - type scraper seal

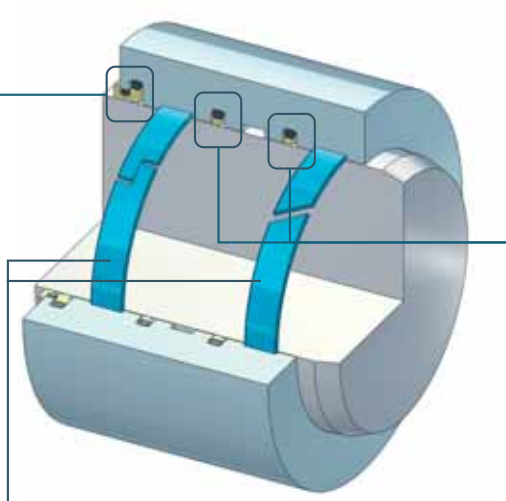

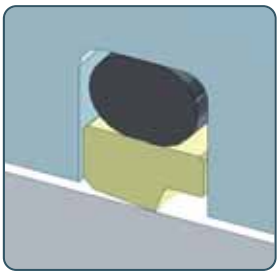

DanaStep® in tandem

Wear rings in REPKOT®

(see page 5)

POSSIBLE ALTERNATIVE SET-UPS

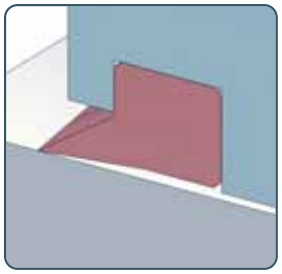

HRX - type scraper

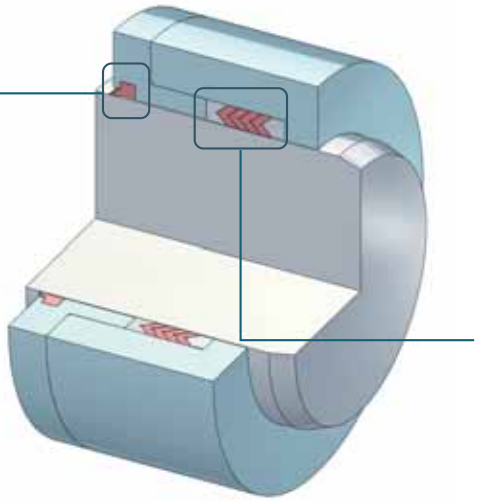

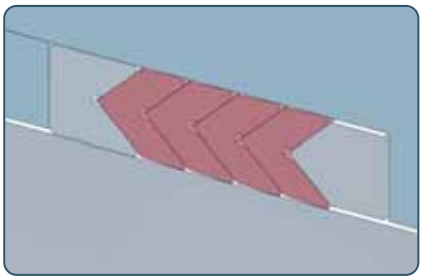

CH - type Chevron packing

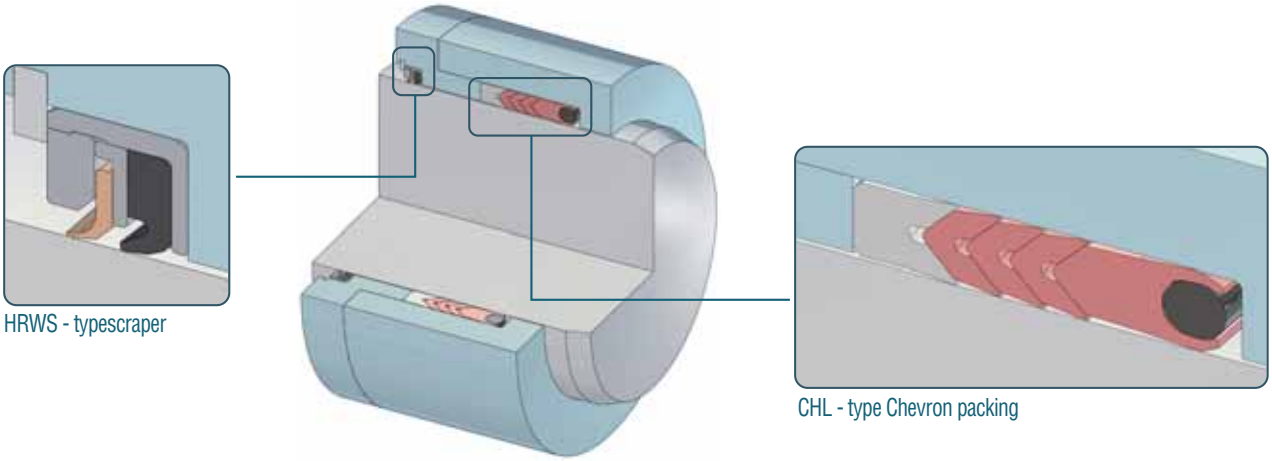

HRWS - type scraper

Composite scraper comprising a metal cage assembly holding a metallic outer scraping lip and an elastomer or thermoplastic inner one.

Advantages:

- Effective scraping of solid deposits on the rods
- Excellent wear resistance
- Twin lip system allows for perfect wiping
- Effectiveness retained even in case of severe rod buckling thanks to the floating outer lip

Tried & tested materials:

- **Cage assembly:** AU4G, AISI 304, soft steel
- **Outer lip :** Brass AISI 304
- **Inner lip:** NBR, EPDM, FKM, P81 (PU), P82 (PU), P91 (UHMW-PE)

Note: HRWS - type scrapers can be custom designed and manufactured according to the existing grooves and the operating conditions.

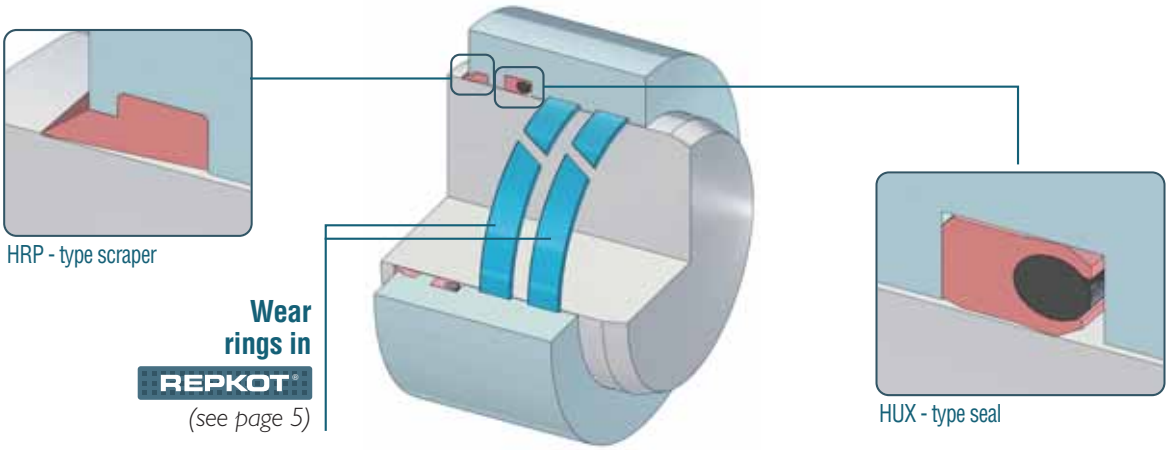

HRP - type scraper

Single-acting polyurethane scraper.

Advantages:

- Proven effectiveness against dust and others deposits which do not naturally stick to the rod
- Good wear resistance
- Easy to install & change in case of retrofit

Tried & tested materials:

P81 (PU), P82 (PU), P91 (UHMW - PE)

Note: HRP - type scrapers can be custom designed and manufactured according to the existing grooves and the operating conditions.

STEM SEAL

POSSIBLE SET-UP

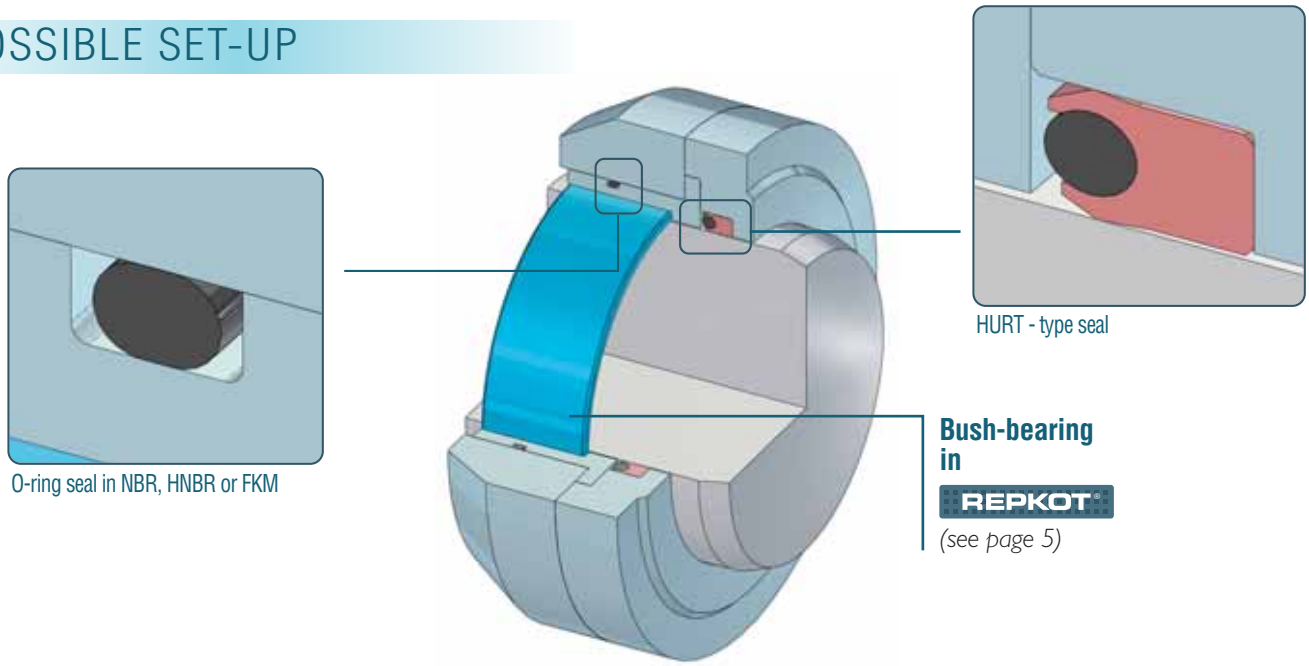

HURT - type seal

Single-acting seal comprising an outer jacket in polyurethane as a dynamic seal
and housing an elastomer o-ring energiser enabling the jacket to seal even at low pressure.

Advantages:
- Ability to cope with high eccentricity
- Excellent wear resistance
- Long service lifetime
- Ideal for retrofits and upgrades

Tried & tested materials:
- **Jacket:** P82 (PU), P84 (PU)
- **O-ring energiser:** Low compression set NBR or FKM 70 shores A compound

Note: HURT - type seals are custom designed & made, depending on the operating conditions.

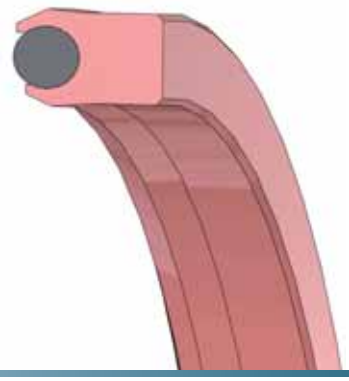

IMPORTANT NOTE

In case grease or oil is used to lubricate the bearings or bushes, a DANAROTO® *(see page 14)* should be used on the water side, as it will prevent the lubricants from polluting the water. It will also filter the particles and prevent water from mixing with lubricants.

SEAT SEAL

POSSIBLE SET-UP

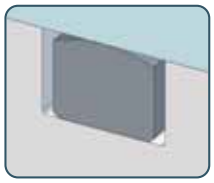
D-seal

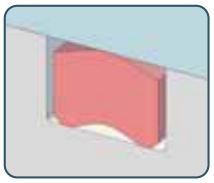
D-seal Special

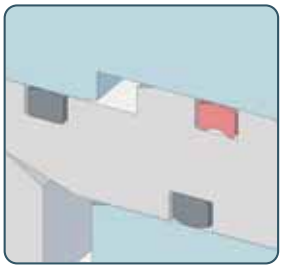

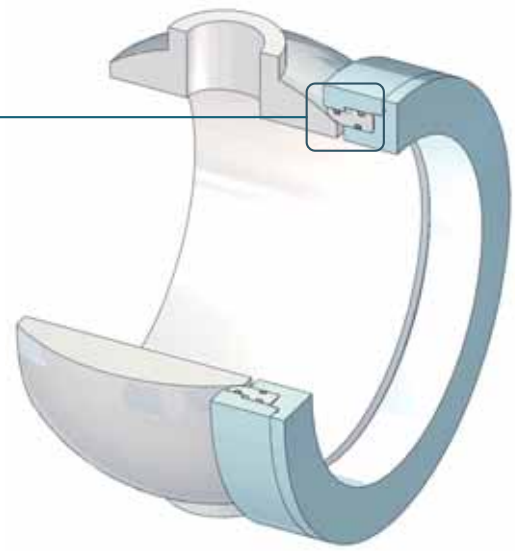

D-seal

Double-acting seal with a "D"-shape cross-section in a low-modulus elastomer or polyurethane compound.

Advantages:
- Excellent seal tightness
- Stability in groove - no spiralling during installation or back & forth seat motion
- Good extrusion resistance
- Good abrasion resistance
- Long lifetime in service
- Easy to install

Tried & tested materials:
- NBR 85 Shore A, P82 (PU), NP03 (OSIS®)

Note: : D-seals are designed and manufactured in accordance with the application specifications, without limit on the diameter

AVAILABLE WITH OSIS® Advanced Seal Joining Solutions

D-SEAL

D-SEAL SPECIAL

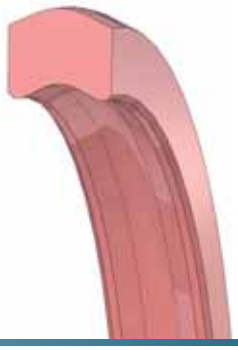

ALTERNATIVE SOLUTION TO THE D-SEALS

DANACAP®

Double-acting composite seal comprising a high-performance thermoplastic "low profile" dynamic sealing pad and an elastomer o-ring energiser installed on the inner diameter.

Advantages:
- Low friction
- Good resistance to extrusion
- Suitable for high pressure conditions

Tried & tested materials:
- **Dynamic sealing pad :** P81 (PU), P82 (PU) or P91 (UHMW-PE)
- **O-ring energiser:** Low compression set NBR or FKM 70 shores A compound

Note: : DanaCap® seals can be custom designed and manufactured from other materials than those listed above, depending on the operating conditions.

PISTON

SPECIAL

LENS SEAL

ME - type seal

Single piece seal in NBR that seals around the lens as well as the stems.
Such parts are compression moulded.

Advantages:

- Excellent abrasion resistance => Ideal for low sediment content water
- Good lifetime in service

Tried & tested materials:

NBR and HNBR compounds with low compression set and high shear strength

Note: ME - type seals can be custom designed and manufactured from other materials than those listed above, depending on the operating conditions.

TSP - type seal

Double-acting composite seal comprising a "T"-shape sealing element that rests against the valve seat and a square-section elastomer energiser.

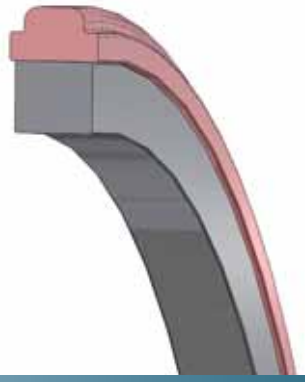

Advantages:

- Excellent abrasion resistance => Ideal for water containing sediments, sand and other highly abrasive particles

Tried & tested materials:

- "T"- shape ring: P81, (PU), P82 (PU), NP04 (OSIS®)
- Square energiser: Low compression set NBR 70 to 85 Shore A

Note: TSP - type seals can be custom designed and manufactured from other materials than those listed above, depending on the operating conditions.

AVAILABLE WITH OSIS® Advanced Seal Joining Solutions

TENSIONING CYLINDER

HYDRAULIC TENSIONING DEVICES

POSSIBLE SET-UP

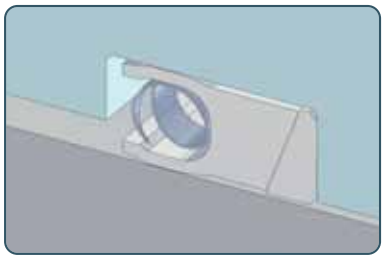

H-type DanaFlex®

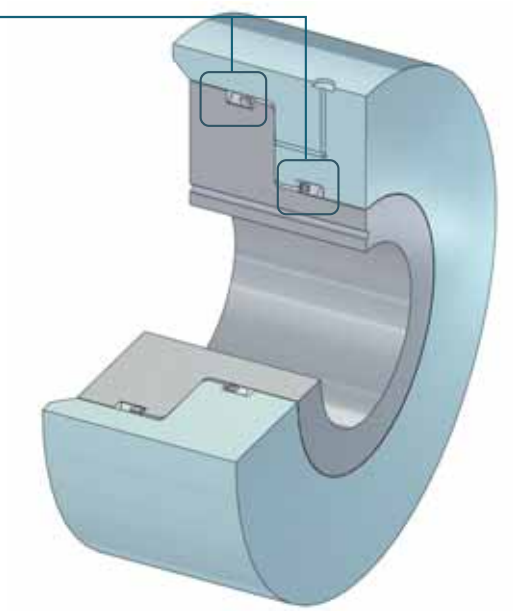

H-type DANAFLEX®
(see description page 9) in combination with a sloping back-up ring.

Advantages:
- Extreme extrusion resistance even under very high pressure
- Well proven reliability

Tried & tested materials:
- **Jacket:** P81 (PU), P91 (UHMW-PE)
- **Spring :** AISI 304
- **Back-up ring:** PA or POM

DOWNSTREAM EXPANSION SLEEVE

POSSIBLE SET-UP

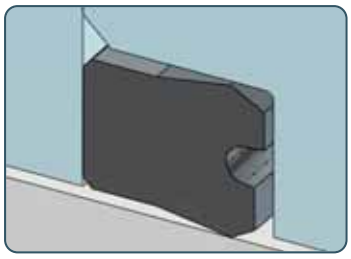

GUX - type seal

AVAILABLE WITH OSIS® Advanced Seal Joining Solutions

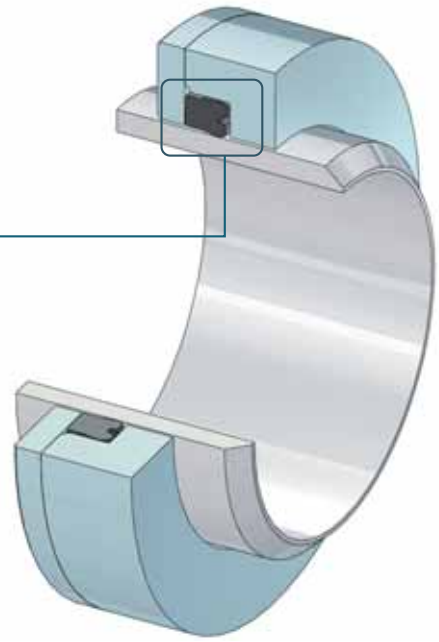

Seal design according to the operation conditions.

Advantages:
- Effectiveness / reliability / Easy to install

Tried & tested materials:
- NBR 85 shores A compound, NP03 (OSIS®) or NP04 (OSIS®)

EXPANSION JOINT SEAL

POSSIBLE SET-UP

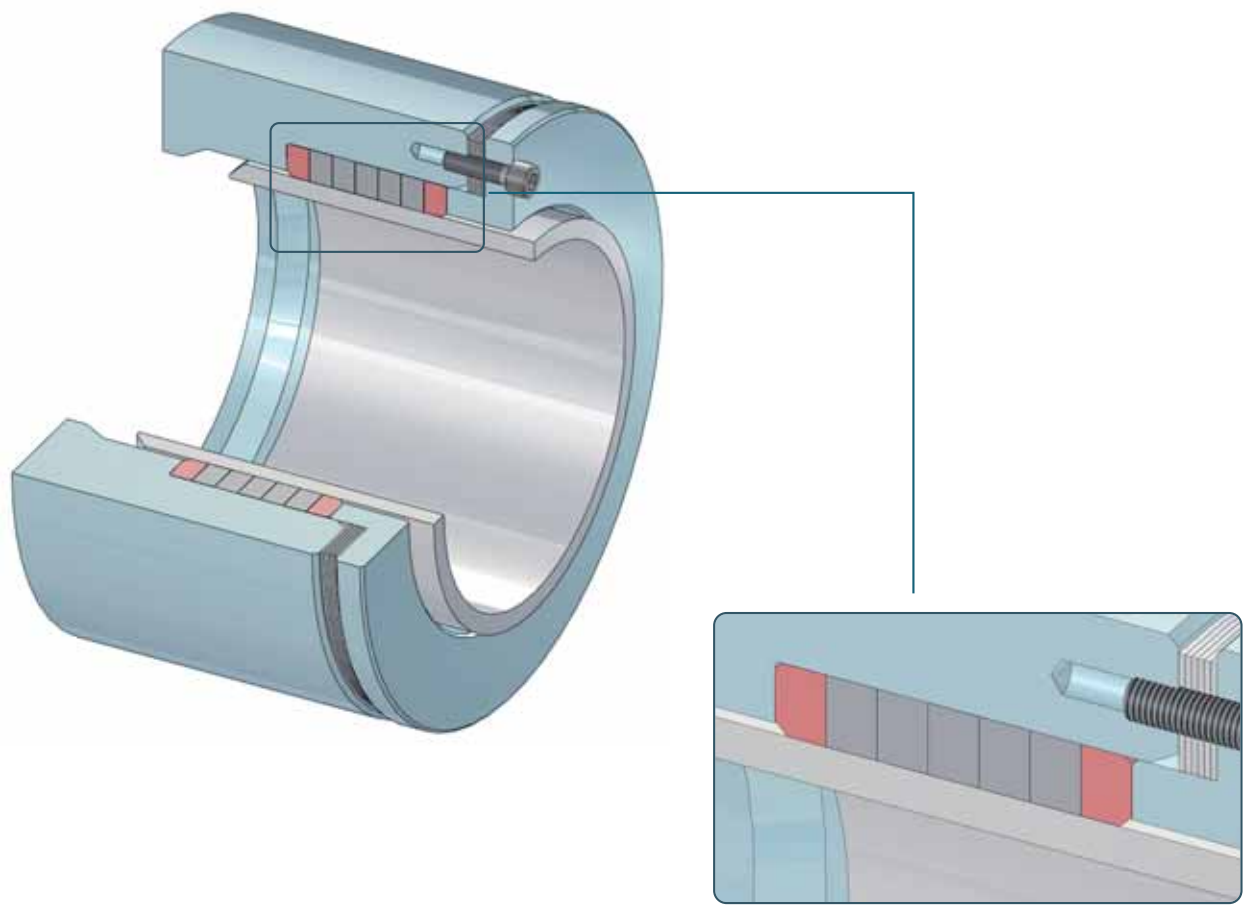

Expansion joint seal

Advantages:

- Highly effective sealing thanks to the adjustable pre-load system
- Extrusion resistance
- Long service lifetime
- Easy to install

Tried & tested materials:

- **Packing:** self-lubricated and reinforced with Kevlar®
- **Back-up rings:** P81 (PU)

Note: The expansion joint seals are manufactured in accordance with the application, with no diameter limit.

MATERIALS TABLE

Code	Composition	Movement				T°C	Fluids	Characteristics
		⇄	↻	↺	⟲			
Filled PTFE								
P24	Bronze filled PTFE	E	P	G	E	-100 / +200	oil / grease	High extrusion resistance
P32	carbon + graphite filled PTFE	E	E	E	E	-100 / +200	water / oil	Wear and extrusion resistant
P41	carbon fiber filled PTFE	E/G	E	E	E/G	-100 / +200	water / oil	Used in high speed
P151	Specific filled PTFE	G	E	E	E/G	0 / +200	water / dry air	Excellent wear resistance
Hydrophobic polyurethane (PU)								
P81	Polyurethane 72 shore D	E	P	G/F	E/G	-40 / +100	water / oil / grease	High extrusion resistance
P82	Polyurethane 58 shore D	E	P	E/G	E/G	-40 / +100	water / oil	Abrasion resistance
P84	Polyurethane 95 shore A	E	P	F/P	G/F	-35 / +105	water / oil / air	High static and dynamic sealing effect
Polyethylenes (PE)								
P91	UHMW-PE	E	P	E/G	E/G	-100 / +80	oil / water / dry air	Self-lubricating - low wear
P912	UHMW-PE + filled PTFE	E	P	E/G	E/G	-100 / +80	oil / water / dry air	Very low friction
P919	UHMW-PE + solid lubricants	E	P	E/G	E/G	-100 / +80	oil / water	High abrasion resistance
Elastomers								
NBR	Acrylonitrile butadiene	NC	NC	NC	NC	-30 / +100	water / oil	Good mechanical properties
HNBR	Hydrogenated acrylonitrile butadiene	NC	NC	NC	NC	-30 / +140	water / oil	Better performances than NBR
FKM	Fluorocarbon	NC	NC	NC	NC	-20 / +200	oil / grease	Excellent in High temperature
S800	Cotton fabric / NBR	NC	NC	NC	NC	-35 / +120	water / oil	Hard working conditions
HT700	Cotton fabric / HNBR	NC	NC	NC	NC	-35 / +150	water / oil	"Heavy-Duty" application
REPKOT®								
R4G	Polyester fabric + graphite	E	G/F	E	E	-50 / +100	oil / grease	High load capacity
R2M	Polyester Fabric +MoS^2 + PTFE	E	G/F	E	E	-50 / +100	eau / loaded water	Excellent in water
R15MP	Polyester/PTFE fabric + MoS^2 + PTFE	E	G/F	E	E	- 50 / +100	water / dry air	Low friction in water or in dry conditions

E = Excellent G = Good F = Fair P = Poor

NC : contact us, subject to the actual working conditions and the type of seal considered

⇄	Linear reciprocating	↺	Alternative rotation < 0,3 m/s
↻	Continuous rotation	⟲	Helicoil motion movement

Repack-S

ALL YOU EXPECT
IN SEALING EXPERTISE

cofrac
AB certification
ISO 9001 : 2008

ZI du Bois Bernoux - 71290 CUISERY France
Tél. +33 (0)3 85 32 10 14 - Fax +33 (0)3 85 32 52 12
www.repack-s.com - contact@repack-s.com